Embracing Challenge

Regulated Ex-Heater

HEX5-1.08 with internal controller, HEX5-2.08 with external controller

Ⓔx II 3 G Ⓔx II 3 D

Instruction Manual
Version 1.02.03

Dear customer,

Thank you for buying our product. In this manual you will find all necessary information about this M&C product. The information in the manual is fast and easy to find, so you can start using your M&C product right after you have read the manual.

If you have any question regarding the product or the application, please don't hesitate to contact M&C or your M&C authorized distributor. You will find all the addresses in the appendix of this instruction manual.

For additional information about our products, please go to M&C's website www.mc-techgroup.com. There you can find the data sheets and manuals of our products in German and English.

This Operating Manual does not claim completeness and may be subject to technical modifications.
© 03/2022 **M&C** Tech**Group** Germany GmbH. Reproduction of this document or its content is not allowed without permission from **M&C**.

Version: 1.02.03

The original instruction manual is in German.

List of Contents

List of illustrations

Head Office

M&C Tech**Group** Germany GmbH ◆ Rehhecke 79 ◆ 40885 Ratingen ◆ Germany
Telephone: 02102 / 935 - 0
Fax: 02102 / 935 - 111
E - mail: info@mc-techgroup.com
www.mc-techgroup.com

1 GENERAL INFORMATION

The product described in this manual has been supplied in a safe and tested condition. For safe operation and to maintain this condition, the information and instructions in this manual must be followed. In addition, the appropriate transportation, proper storage and installation as well as careful operation and maintenance are necessary.
For the proper use of this product, all information required for technical personnel is contained in this manual.

2 DECLARATION OF CONFORMITY

CE - Certification

The product described in this instruction manual complies with the following EU directives:

ATEX-Directive

The product described in this manual is produced in accordance with the directive for devices and protection systems for appropriate use in hazardous areas 2014/34/EU appendix II.

EMV-Instruction

The requirements of the directive 2014/30/EU “Electromagnetic compatibility“ are met.

Low Voltage Directive

The requirement of the directive 2014/35/EU “Low Voltage Directive“ are met.

RoHS Directive

The requirements of the RoHS2 (‘Restriction of Hazardous Substances 2’) directive 2011/65/EU and its annexes are met.

Declaration of conformity

The EU Declaration of conformity can be downloaded from the **M&C** homepage or directly requested from **M&C**.

3 SAFETY INSTRUCTIONS

Observe the following safety precautions when using this equipment:

- Read these operating instructions carefully before start-up and use of the equipment! The information and warnings given in these operating instructions must be heeded.
- The Certificate of Conformity (see appendix) must absolutely be heeded:
- Work on electrical equipment is only to be carried out by trained specialists as per the regulations currently in force.
- Attention must be paid to the requirements of **VDE 0100** when setting high-power electrical units with nominal voltages of up to 1000 V, together with the associated standards and stipulations.
- For use in hazardous area observe the relevant national and international instructions and regulations.
- Check the details on the type plate to ensure that the equipment is connected up to the correct mains voltage.
- Explosion protection and personal protection at dangerously high electrical voltages: Before opening the equipment, it must be switched off and must be voltage free. This also applies to any external control circuits that are connected.
- The equipment is only to be set within the permitted range of temperatures.
- To prevent burns due to high surface temperatures, cover the heating plate with suitable measures.
- Make sure that you install the device in a weather-protected location. The device should not be exposed to either direct sun, rain or moisture.
- Installation, maintenance, monitoring and any repairs may only be done by authorised personnel with respect to the relevant stipulations.

3.1 INTENDED USE

The heater is suitable for use in potentially explosive atmospheres of equipment group 3. The device can only be operated under the conditions described in chapter 4 and chapter 8 of these operating instructions.
Refrain from any use other than for this purpose. Improper use can lead to serious injury, see the safety instructions at the appropriate place.

4 INFORMATION AND SAFETY INSTRUCTIONS FOR USING THE HEATING IN HAZARDOUS AREAS

The heater is suitable for use in hazardous areas Device 3.
Markings:
EX Certifications: Ⓔx II 3 G Ex ec nC IIC Temperature Class T5 to T2 Gc
Ⓔx II 3 D Ex tc IIIC T 75 °C to 235 °C Dc

CSA Approval Standard:
CAN/CSA-C22.2 No. 1010.1 and 213-M87, Class I, Div. 2, Groups A/B/C/D,
Temperature Class T5 to T2.

The certification was issued by DEKRA EXAM.

Detailed information and a copy of the Certificate are enclosed to this operating manual. Installation and operation must be effected according to the conditions respectively installation instructions as stipulated in the Ex-Certificate (see appendix). Only then, a sure operation and function in hazardous areas is guaranteed.
All changes of the standard configuration with parts which are not specified or approved by **M&C** as well as repair and service with not specified parts means a loss of the Ex-Certificated.

*In case of doubt, please contact **M&C** directly or your **M&C** –franchised dealer.*

5 WARRANTY

In case of a device failure, please contact immediately M&C or your M&C authorized distributor.

We have a warranty period of 12 months from the delivery date. The warranty covers only appropriately used products and does not cover the consumable parts. Please find the complete warranty conditions in our terms and conditions.

The warranty includes a free-of-charge repair in our production facility or the free replacement of the device. If you return a device to M&C, please be sure that it is properly packaged and shipped with protective packaging. The repaired or replaced device will be shipped free of delivery charges to the point of use.

6 USED TERMS AND SIGNAL INDICATIONS

Danger

This means that death, severe physical injuries and/or important material damages **will occur** in case the respective safety measures are not fulfilled.

Warning

This means that death, severe physical injuries and/or important material damages **may occur** in case the respective safety measures are not fulfilled.

Caution

This means that minor physical injuries **may occur** in case the respective safety measures are not fulfilled.

Caution

Without the warning triangle means that a material damage may occur in case the respective safety measures are not met.

Attention

This means that an unintentional situation or an unintentional status may occur in case the respective note is not respected.

Note

These are important information about the product or parts of the operating manual which require user's attention.

Qualified personnel

These are persons who are familiar with the installation, commissioning, maintenance and operation of the product and have the necessary qualifications through training or instruction. Qualified personnel must have at least the following knowledge:

- Instructed person in EX-protection
- Trained person in the electrotechnical field
- Detailed knowledge of the operating instructions and the applicable safety regulations

'EX' indicates important information about the product or about the corresponding parts in the instruction manual, relating to usage in potentially explosive atmospheres.

High voltages!
Protect yourself and others against damages which might be caused by high voltages.

Wear protective gloves!
Working with chemicals, sharp objects or extremely high temperatures requires wearing protective gloves.

7 INTRODUCTION

The electrical heater is designed to heat metal bodies (e.g. M&C sample gas probe SP.., M&C filter FT-H..).
Only M&C personnel will mount the heater to the specified object.
The heater consists of an alumnium heating plate with a heating element (power consumption of up to 830 W), an electronical thermostat with limiter and a temperature sensor (PT100).

There are two versions available:
Type HEX 5-1.08 Heater with thermostat integrated in a wall mount enclosure
Type HEX 5-2.08 Heater with terminal box in a wall mount housing and an external temperature controller.

There is a warning label located on top of the heater.

The controller will be programmed according to the required temperature class by M&C personnel, and the device will leave M&C protected against unauthorized access.

The temperature controller is equipped with an over temperature limiter which automatically shuts off the heating, when the temperature is 5 °C [9 °F] higher than the adjusted set-point temperature. The heater can be restarted either by interrupting the power supply or by pressing the ‘Exit’-button. Indication on regulator K2 is in normal operating „AN“ (ON).

For temperature monitoring, the temperature controller is equipped with a low temperature alarm, which sets off when the temperature is 10 °C [18 °F] lower than the set-point temperature. This status alarm is available as a potential-free contact inside the terminal box. The contact is closed and the Indicator on controller K1 is “AN” (ON), when the heater has reached the operating temperature. Indicator K3 shows that the heater is activated.

Figure 1 Version HEX 5-1.08 and Version HEX 5-2.08

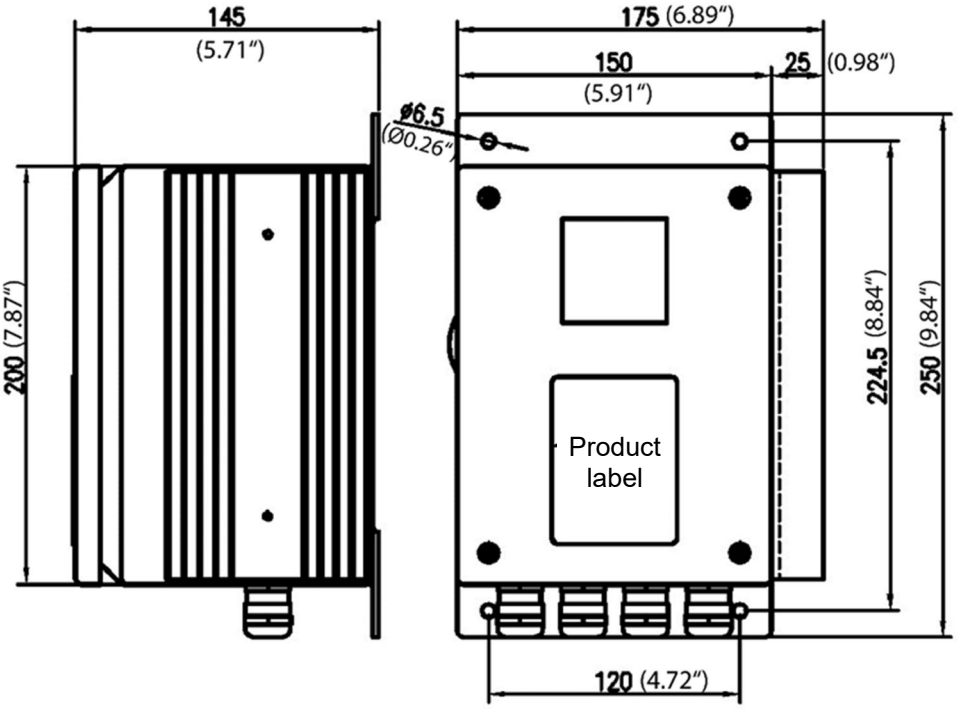

Figure 2 Dimensions of the temperature regulator HEX 5-2.08

7.1 SERIAL NUMBERS

The product label with the serial number is located on the top of the temperature controller.
Please refer to this serial number if you have any questions about your device or if you need to order spare parts or consumables.

7.2 POWER SUPPLY

The heater can be operated on alternating current in the range of 240 V 50/60 Hz with max. 800 W or alternatively 120 V 50/60 Hz with max. 830 W.

8 TECHNICAL DATA

Electrical Heater	**Version HEX 5-1.08**	**Version HEX 5-2.08**
Temperature regulator	Integrated	Externally
Part No. 240 V power version	20S9650	20S9655
Part No. 120 V power version	20S9650a	20S9655a
Power supply	240 V 50/60 Hz max. 800 W *or 120 V,50/60 Hz max. 830 W*	
Electr. Connection	Screwed cable gland Range for cable glands 6 -12 mm [≈ 0.24”-0.47”], Teminals; max. 4 mm²	
System of protection	IP65 EN 60529	
Ex Protection	**Temperature controller with heating** Ⓔx II 3 G Ex ec nC IIC T2 – T5 Gc Ⓔx II 3D Ex tc IIIC T75 – 235°C Dc BVS 09 ATEX E 107 IECEx BVS 16.0025 Class I, Div. 2, Groups A/B/C/D, T2 –T5	**Temperature controller** Ⓔx II 3G Ex ec nC IIC T5 Gc Ⓔx II 3D Ex tc IIIC T75 Dc BVS 09 ATEX E 107 IECEx BVS 16.0025 Class I, Div. 2, Groups A/B/C/D, T5 **Heating with connection box** Ⓔx II 3G Ex ec IIC T2 – T5 Gc Ⓔx II 3D Ex tc IIIC T75 – 235°C Dc BVS 09 ATEX E 107 IECEx BVS 16.0025 Class I, Div. 2, Groups A/B/C/D, T2 –T5
	Temperature classes see next page	
Ambient temperature	Temperature controller 0 to +50 °C [32 to +122 °F]	Temperature controller 0 °C to +50 °C [32 to +122 °F] Heater terminal box -20 to +70 °C [-4 to +158 °F]
Operating temperature	0 to max 230 °C [32 to max. 446 °F] depending on Temp.-class. Please specify with order.	
Temperature status alarm	10 °C [18 °F] lower than T_{SET} Switch capacity 250 V 3 A AC, 0.25 A DC. 1 contact NO, potential-free.	
Over temperature limiter	5 °C [9 °F] higher than T_{SET}, manual Reset	
Ex Standards	IEC 60079-0: 2011 Ed.6 EN 60079-0:2012 + A11:2013 IEC 60079-7: 2015 Ed.5 EN 60079-7:2007 IEC 60079-15: 2010 Ed.4 EN 60079-18:2009 IEC 60079-31: 2013 Ed.2 EN 60079-31:2014	

Table temperature class									
	NEC 500 Temperature class			Atex Temperature class Cenelec/IEC/Nec 505			Parameter for the controller configuration		
M&C Part No	NEC 500	NEC 500 °C	Max °C - 20%	Atex	Atex °C	Atex Max °C Atex -5°C	Limiter °C	Operating temperature °C	Status °C
20S9608	**T2**	300 (572 °F]	240 (464 °F]	**T2**	235 [455 °F]	230 [446 °F]	235 [455 °F]	230 [446 °F]	220 [428 °F]
20S9609	**T2A**	280 [536 °F]	224 [435.2 °F]	**T2**			220 [428 °F]	215 [419 °F]	205 [401 °F]
20S9610	**T2B**	260 [500 °F]	208 [406.4 °F]	**T3**	200 [392 °F]	195 [383 °F]	190 [374 °F]	185 [365 °F]	175 [347 °F]
20S9611	**T2C**	230 [446 °F]	184 [363.2 °F]	**T3**			180 [356 °F]	175 [347 °F]	165 [329 °F]
20S9612	**T2D**	215 [419 °F]	172 [341.6 °F]	**T3**			165 [329 °F]	160 [320 °F]	150 [302 °F]
20S9613	**T3**	200 [392 °F]	160 [320 °F]	**T3**			155 [311 °F]	150 [302 °F]	140 [284 °F]
20S9614	**T3A**	180 [356 °F]	144 [291.2 °F]	**T3**			140 [284 °F]	135 [275 °F]	125 [257 °F]
20S9615	**T3C**	160 [320 °F]	128 [262.4 °F]	**T4**	135 [275 °F]	130 [266 °F]	125 [257 °F]	120 [248 °F]	110 [230 °F]
20S9616	**T4**	135 [275 °F]	108 [226.4 °F]	**T4**			100 [212 °F]	95 [203 °F]	85 [185 °F]
20S9617	**T4A**	120 [248 °F]	96 [204.8 °F]	**T5**	100 [212 °F]	95 [203 °F]	90 [194 °F]	85 [185 °F]	75 [167 °F]
20S9618	**T5**	100 [212 °F]	80 [176 °F]	**T5**			75 [167 °F]	70 [158 °F]	60 [140 °F]
The temperature controller is programmed and locked at M&C.									

9 MOUNTING

Warning

Make sure to mount the device in a weather-protected location. The device should not be exposed to either sun, direct rain or any other liquids.

The electrical heating HEX 5-1.08 is already mounted completely with temperature controller at the device by **M&C**.
For the electrical heating HEX 5-2.08 the temperature controller in a wall mounting housing is delivered separately and has to be mounted at desired place and than electrically connected with the connection box of the heating. The mounting dimensions are shown in figure 2.

- In case of the externally mounted temperature regulator, the maximum ambient temperature of the heater connection box that is allowed is +70°C [158 °F].

Warning

The heated part of the device must be tightly mounted. A minimum distance of 100 mm [≈ 3.94”] to other components has to be kept in order to avoid an accumulation of heat.

10 ELECTRICAL CONNECTION

Caution

When connecting the equipment, make sure that the supply voltage is identical with the information provided on the model type plate!

Warning

Only carry out work on the open device, when the area has been proved to be „safe“.

Note

The installation and commissioning of the device must conform to the requirements of VDE 0100 (IEC 364) ‘Regulations on the Installation of Power Circuits with Nominal Voltages below 1000 V’ and must be in compliance with all relevant regulations and standards.

- The cables used for connecting the heater must have a diameter of 6-12 mm [≈ 0.24” to 0.42”].
- Depending on the ambient temperature at the mounting location, the cables used for the wiring must be temperature resistant according to requirement.
- Connect the housing of the temperature controller, and if applicable the electrical connection box of the HEX5.2-08, to earth (equipotential bonding).

Electrical connections electric heater HEX 5-1.08

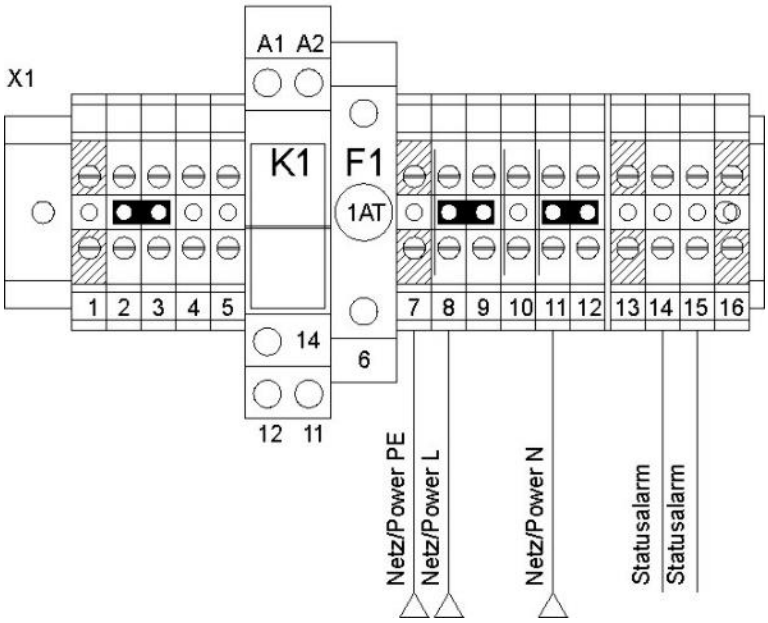

Figure 3 Electrical connection HEX 5-1.08

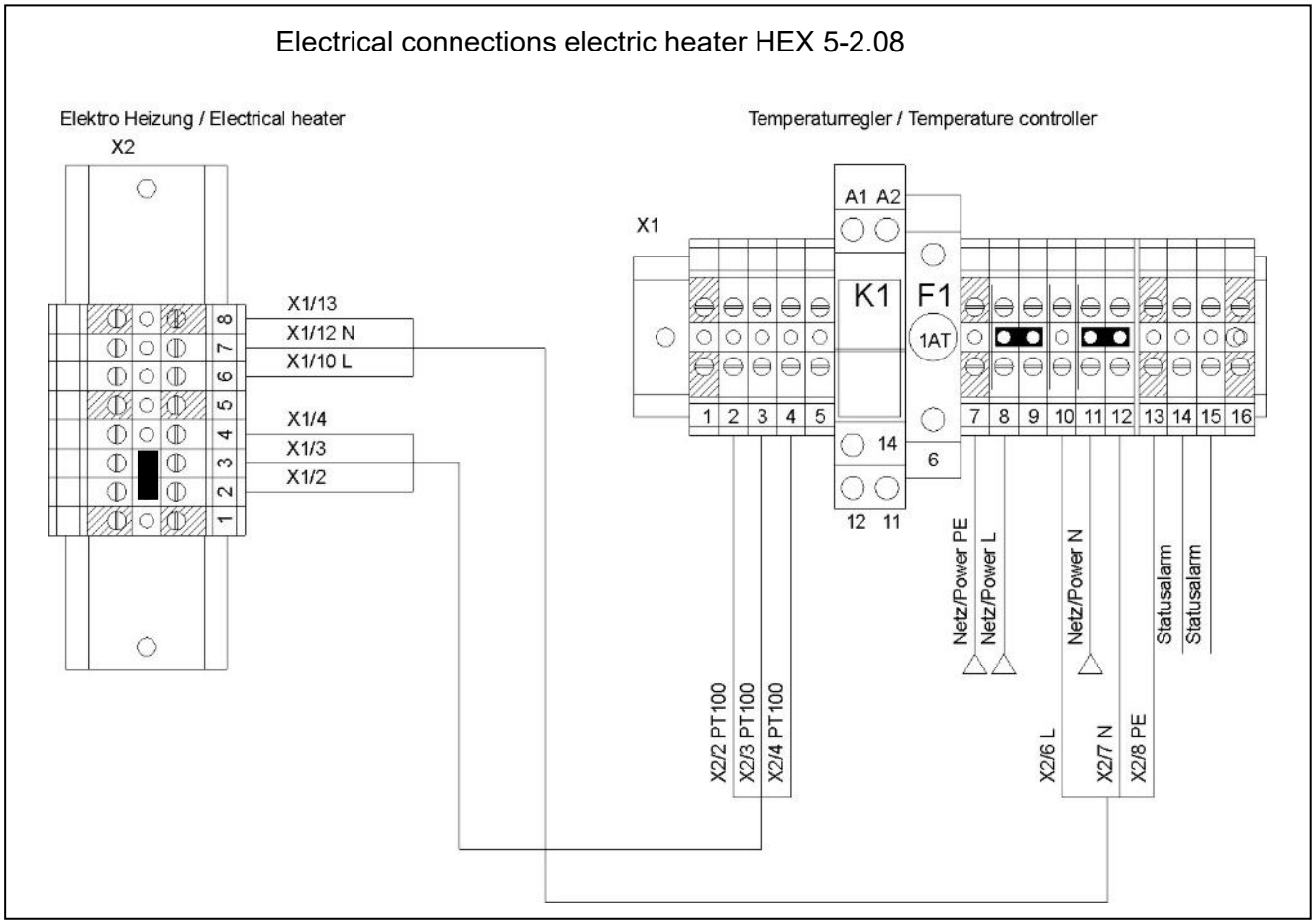

Figure 4 **Electrical connection HEX 5-2.08**

11 STARTING

- Before starting the device, check if the power supply corresponds with the indications on the type plate.
- Before starting the device, check if the housing of the temperature controller and if applicable the connection box (HEX 5-2.08) are connected to the equipotential bonding.
- Then close lid of the housing and switch on the power supply.

High surface temperatures!

Touching may result in burns.

When the ambient temperature is higher than 40 °C [104 °F], the temperature of the protection and isolating cover will be more than 60 °C [140 °F].

Figure 5 Example Heater HEX5-1.08 on gas sample probe SP3200

The heating up is regulated to 1.5 °C/min [2.7 °F per minute] by default via a programmed temperature ramp. The total time of heating up is approx. 2 h for example in case of the heated object Gas Sample Probe SP3200 HEX5-1/2.08 regulated to 180 °C [356 °F]. Signal is given by the temperature alarm.

12 CLOSING DOWN

Note

The ambient temperature at the device location needs to correspond to the stated minimum and maximum ambient temperatures, even when the unit has been switched off!

13 MAINTENANCE

Warning

Before carrying out any type of maintenance work, pay close attention to the specific system and process safety measures!

Warning

When working during operation:

High surface temperatures!

Touching may result in burns.

Wear protective gloves and assure that no unauthorized person will touch the equipment!

Warning

Only carry out work on the open device, when the area has been proved to be „safe“.

The installation and commissioning of the device must conform to the requirements of VDE 0100 (IEC 364) ‘Regulations on the Installation of Power Circuits with Nominal Voltages below 1000 V’ and must be in compliance with all relevant regulations and standards.

Only change the fine-wire fuse F1 (1 AT (time-lag), 5 x 20) when the power supply is disconnected. Spare fuse has to have a CSA/UL approval, M&C part number: 90K0055

Danger

Attention! The controller will be programmed according to the required temperature class, and will leave M&C protected against unauthorized access. A wire strap on the terminal strip X1/5 protects against unauthorized access.
The programming of the temperature class affects the complete heater and can only be modified by M&C personnel.

14 CLEANING

Note

Clean the outside of the terminal box and the controller housing with a damp cloth with a soap solution.

15 APPENDIX

- Connection diagrams
- Type Examination Certificate
- Type Examination Certificate Supplement 1
- CSA- Certificate of Compliance
- IECEx Certificate of Conformity

For additional manuals and data sheets please look on our home page
www.mc-techgroup.com

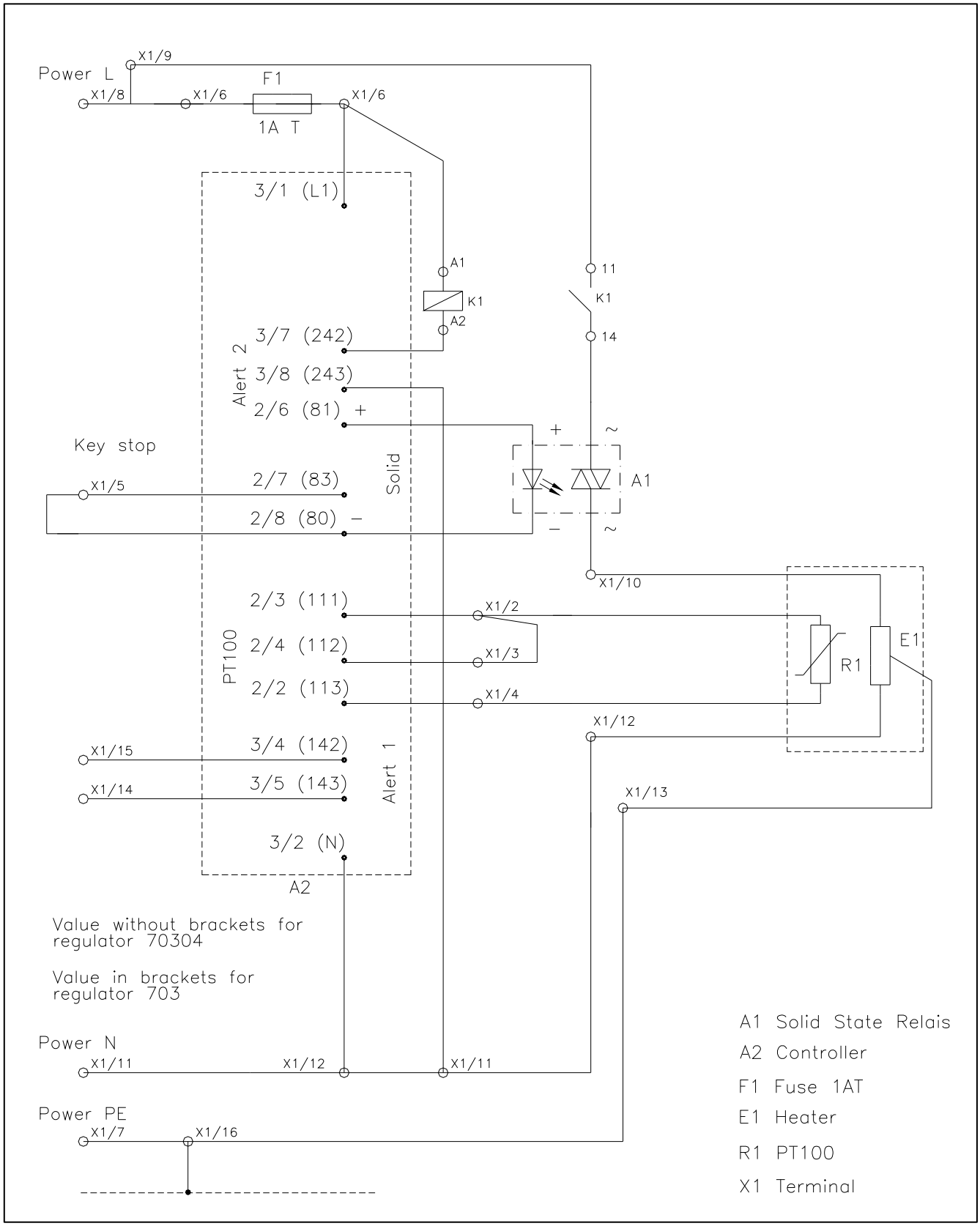

Figure 6 **Connection Diagram HEX 5-1.08**

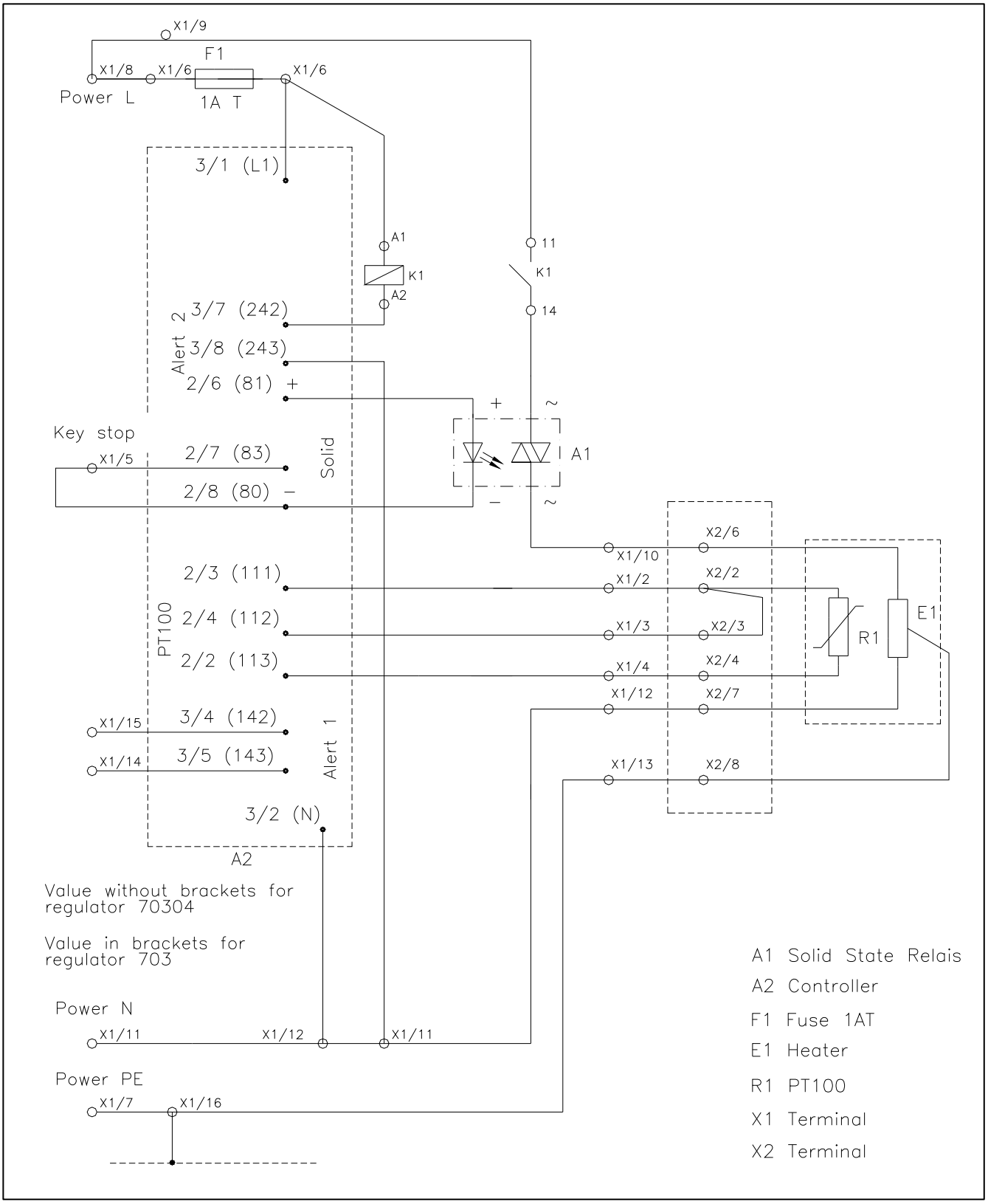

Figure 7 **Connection Diagram HEX 5-2.08**

DEKRA

Translation

(1) # EC-Type Examination Certificate

(2) **- Directive 94/9/EC -**
Equipment and protective systems intended for use in potentially explosive atmospheres

(3) ## BVS 09 ATEX E 107

(4) **Equipment:** **Heater HEX5-*.08**

(5) **Manufacturer:** **M&C TechGroup Germany GmbH**

(6) **Address:** **40885 Ratingen, Germany**

(7) The design and construction of this equipment and any acceptable variation thereto are specified in the appendix to this type examination certificate.

(8) The certification body of DEKRA EXAM GmbH, notified body no. 0158 in accordance with Article 9 of the Directive 94/9/EC of the European Parliament and the Council of 23 March 1994, certifies that this equipment has been found to comply with the Essential Health and Safety Requirements relating to the design and construction of equipment and protective systems intended for use in potentially explosive atmospheres, given in Annex II to the Directive.
The examination and test results are recorded in the test and assessment report BVS PP 09.2139 EG.

(9) The Essential Health and Safety Requirements are assured by compliance with:

EN 60079-0:2006	General requirements
EN 60079-15:2005	Type of protection 'n'
EN 61241-0:2006	General requirements
EN 61241-1:2004	Protection by enclosures 'tD'

(10) If the sign "X" is placed after the certificate number, it indicates that the equipment is subject to special conditions for safe use specified in the appendix to this certificate.

(11) This EC-Type Examination Certificate relates only to the design, examination and tests of the specified equipment in accordance to Directive 94/9/EC.
Further requirements of the Directive apply to the manufacturing process and supply of this equipment. These are not covered by this certificate

(12) The marking of the equipment shall include the following:

Ex II 3G Ex nA nC nL IIC T2-T5 II 3D Ex tD A22 IP65 T 75°C – 235°C	type HEX5-1.08 with integrated temperature control
Ex II 3G Ex nA II T2-T5 II 3D Ex tD A22 IP65 T 75°C – 235°C	type HEX5-2.08 with connection box
Ex II 3G Ex nA nC nL IIC T2-T5 II 3D Ex tD A22 IP65 T 75°C – 235°C	type HEX5-2.08 controller

DEKRA EXAM GmbH
Bochum, dated 07th September 2009

Signed: Simanski — Certification body

Signed: Dr. Eickhoff — Special services unit

Page 1 of 3 of BVS 09 ATEX E 107
This certificate may only be reproduced in its entirety and without change
DEKRA EXAM GmbH Dinnendahlstrasse 9 44809 Bochum Germany Phone +49 234/3696-105 Fax +49 234/3696-110 E-mail zs-exam@dekra.com

DEKRA

(13) Appendix to

(14) # EC-Type Examination Certificate

BVS 09 ATEX E 107

(15) 15.1 Subject and type

Heater type HEX5-*.08

└── 1 – Heater with integrated temperature control in the wall construction of the enclosure

2 – Heater with connection box externally mounted and temperature control inside the wall construction of the enclosure

15.2 Description

The heater HEX5-*.08 serves the purpose of heating metal bodies and consists of an aluminium heating plate and a heating cartridge of type of protection nA, of a temperature control with a limiter and a temperature sensor.
There are two variants of heater HEX5-*.08:
Type HEX 5-1: in this case, the temperature control is integrated in the wall construction of the enclosure of type of protection nA.
Type HEX 5-2: in this case, the heater is connected to a connection box of type of protection nA, whereas the temperature control is integrated in the wall construction of the enclosure of type of protection nA.

The relay contacts used comply with the requirements of the type of protection nC, the sensor circuit of the controller complies with the requirements of the type of protection nL.

15.3 Parameters

15.3.1 Electrical data

15.3.1.1	Power supply			
	Voltage	AC	240	V
	Frequency		50/ 60	Hz
	Power		800	W
	or			
	Voltage	AC	120	V
	Frequency		50/ 60	Hz
	Power		830	W
15.3.1.2	Alarm contact	250 V AC 3 A, DC	0.25	A
15.3.2	Thermal data			
	Ambient temperature			
	Temperature control		0 °C... 50	°C
	Heater connection box		20 °C... 70	°C

This certificate may only be reproduced in its entirety and without change
DEKRA EXAM GmbH Dinnendahlstrasse 9 44809 Bochum Germany Phone +49 234/3696-105 Fax +49 234/3696-110 E-mail zs-exam@dekra.com

DEKRA

Temperature classes/max. surface temperature T

	Controller parameters		
Temperature class	Limiter [°C]	Service temperature [°C]	Max. surface temperature T [°C]
T2	235	230	235
T2	220	215	220
T3	190	185	190
T3	180	175	180
T3	165	160	165
T3	155	150	155
T3	140	135	140
T4	125	120	125
T4	100	95	100
T5	90	85	90
T5	75	70	75

15.3.3 Degree of protection as per EN 60529 IP65

(16) Test and assessment report

BVS PP 09.2139 EG as of 07.09.2009

(17) Special conditions for safe use

None

We confirm the correctness of the translation from the German original.
In the case of arbitration only the German wording shall be valid and binding.

44809 Bochum, 20.01.2010
BVS-Hk/Ar E 0046/10

DEKRA EXAM GmbH

Certification body

Special services unit

This certificate may only be reproduced in its entirety and without change
DEKRA EXAM GmbH Dinnendahlstrasse 9 44809 Bochum Germany Phone +49 234/3696-105 Fax +49 234/3696-110 E-mail zs-exam@dekra.com

Translation

1 # Type Examination Certificate Supplement 1

Change to Directive 2014/34/EU

2 **Equipment or Protective System intended for use in potentially explosive atmospheres Directive 2014/34/EU**

3 Type Examination Certificate Number: **BVS 09 ATEX E 107**

4 Product: **Heizung Typ HEX5-*.08**

5 Manufacturer: **M&C TechGroup Germany GmbH**

6 Address: **Rehhecke 79, 40885 Ratingen, Germany**

7 This supplementary certificate extends Type Examination Certificate No. BVS 09 ATEX E 107 to apply to products designed and constructed in accordance with the specification set out in the Appendix of the said certificate but having any variations specified in the Appendix attached to this certificate and the documents therein referred to.

8 DEKRA EXAM GmbH certifies that this product has been found to comply with the Essential Health and Safety Requirements relating to the design and construction of products intended for use in potentially explosive atmospheres given in Annex II to the Directive.
The examination and test results are recorded in the confidential Report No. PP 09.2139 EU.

9 Compliance with the Essential Health and Safety Requirements has been assured by compliance with:

EN 60079-0:2012 + A11:2013	**General requirements**
EN 60079-7:2015	**Increased Safety "e"**
EN 60079-15:2010	**Type of Protection "n"**
EN 60079-31:2014	**Protection by Enclosure "t"**

10 If the sign "X" is placed after the certificate number, it indicates that the product is subject to the Specific Conditions of Use specified in the appendix to this certificate.

11 This Type Examination Certificate relates only to the design and construction of the specified product. Further requirements of the Directive apply to the manufacturing process and supply of this product. These are not covered by this certificate.

12 The marking of the product shall include the following:

II 3G Ex ec nC IIC T2-T5 Gc **II 3D Ex tc IIIC T75°C - 235°C Dc**	Type HEX5-1.08 with integrated temperature control
II 3G Ex ec IIC T2-T5 Gc **II 3D Ex tc IIIC T75°C - 235°C Dc**	Type HEX5-2.08 Heater
II 3G Ex ec nC IIC T2-T5 Gc **II 3D Ex tc IIIC T75°C - 235°C Dc**	Type HEX5-2.08 Controller

DEKRA EXAM GmbH
Bochum, 2016-04-21

Signed: Simanski
Certifier

Signed: Dr. Eickhoff
Approver

This certificate may only be reproduced in its entirety and without any change.

DEKRA EXAM GmbH, Dinnendahlstrasse 9, 44809 Bochum, Germany,
telephone +49.234.3696-105, Fax +49.234.3696-110, zs-exam@dekra.com

13 **Appendix**

14 **Type Examination Certificate**

BVS 09 ATEX E 107
Supplement 1

15 **Product description**
15.1 **Subject and type**

Heizung Typ HEX5-*.08
└ 1 – Internal controller
2 – External controller

15.2 **Description**

With this supplement the certificate is changed to Directive 2014/34/EU.
(Annotation: In accordance with Article 41 of Directive 2014/34/EU, Type Examination Certificates referring to 94/9/EC that were in existence prior to the date of application of 2014/34/EU (20 April 2016) may be referenced as if they were issued in accordance with Directive 2014/34/EU. Supplementary Certificates to such Type Examination Certificates, and new issues of such certificates, may continue to bear the original certificate number issued prior to 20 April 2016.)

Reason for the supplement:

Reason for this supplement is the updating of the applicable standards.

Description of Product

The heater HEX5-*.08 serves for heating of metallic bodies.
It consists of a heating cartridge in type of protection Increased Safety "e" according to BVS 04 ATEX E 253, a temperature controller with limiter and a temperature sensor.
The two variants of the heater HEX5-*.08:
Type HEX 5-1: The heating cartridge and the temperature controller are mounted together in an enclosure in type of protection Increased Safety resp. Protection by Enclosure.
Type HEX 5-2: The heating cartridge and the temperature controller are mounted into two different enclosures in type of protection Increased Safety resp. Protection by Enclosure.

The relays are carried out in type of protection nC.

15.3 **Parameters**
15.3.1 Electrical data

15.3.1.1 Power supply

Voltage	AC	240	V
Frequency		50/60	Hz
Power		800	W
or			
Voltage	AC	120	V
Frequency		50/60	Hz
Power		830	W

15.3.1.2 Alarm contact 250 V AC 3 A, DC 0.25 A

15.3.2 Thermal data

Ambient temperature	0 °C...50	°C
Temperature control	20 °C... 70	°C
Heater connection box		

This certificate may only be reproduced in its entirety and without any change.

DAkkS Deutsche Akkreditierungsstelle D-PL-12009-01-00

DEKRA EXAM GmbH, Dinnendahlstrasse 9, 44809 Bochum, Germany,
telephone +49.234.3696-105, Fax +49.234.3696-110, zs-exam@dekra.com

Temperature classes/max. surface temperature T

Controller parameters			
Temperature class	Limiter [°C]	Service temperature [°C]	Max. surface temperature T [°C]
T2	235	230	235
T2	220	215	220
T3	190	185	190
T3	180	175	180
T3	165	160	165
T3	155	150	155
T3	140	135	140
T4	125	120	125
T4	100	95	100
T5	90	85	90
T5	75	70	75

15.3.3 Degree of protection as per EN 60529 IP65

16 **Report Number**

PP 09.2139 EU, as of 2016-04-21

17 **Specific Conditions of Use**

None
None additional to those listed previously.

18 **Essential Health and Safety Requirements**

The Essential Health and Safety Requirements covered by the standards listed under item 9.

19 **Drawings and Documents**

Drawings and documents are listed in the confidential report.

We confirm the correctness of the translation from the German original.
In the case of arbitration only the German wording shall be valid and binding.

DEKRA EXAM GmbH
Bochum, dated 2016-04-21
BVS-Pe/Mu A 20150037

Certifier Approver

This certificate may only be reproduced in its entirety and without any change.

DEKRA EXAM GmbH, Dinnendahlstrasse 9, 44809 Bochum, Germany,
telephone +49.234.3696-105, Fax +49.234.3696-110, zs-exam@dekra.com

CSA INTERNATIONAL

Certificate of Compliance

Certificate: 1480900

Master Contract: 222408

Project: 2075585

Date Issued: October 28, 2008

Issued to: M & C TechGroup Germany GmbH
Rehhecke 79
40885 Ratingen
Germany

The products listed below are eligible to bear the CSA Mark shown

Issued by: Eric Giusti

Authorized by: M.H.J. Hoendervangers
Area Director, Europe

PRODUCTS

CLASS 2258 02 – PROCESS CONTROLL EQUIPMENT- For Hazardous Locations

Permanently connected heating element with a temperature controller, Model HEX 5-1 and HEX 5-2.

Heating element with a temperature controller for Class I, Div. 2, Gps ABCD, T2B/ …/T5.

ELECTRICAL RATINGS:

Voltage: 120 or 240 Vac, 50/60 Hz
Power: 830 VA

NOTE:

For use in other equipment where the suitability of the combination is to be determined by CSA International.

DQD 507 Rev. 2004-06-30 Page 1

Certificate: 1480900
Project: 2075585

CSA INTERNATIONAL

Master Contract: 222408
Date Issued: October 28, 2008

APPLICABLE REQUIREMENTS

CAN/CSA-C22.2 No. 1010.1-92 -	Safety Requirements for Electrical Equipment for Measurement, Control and Laboratory Use, Part 1; General Requirements
CAN/CSA-C22.2 No. 213-M87 -	Non-Incendive Electrical Equipment for Use in Class I, Division Hazardous Locations

DQD 507 Rev. 2004-06-30

Page 2

CSA INTERNATIONAL

Supplement to Certificate of Compliance

Certificate: 1480900 **Master Contract:** 222408

The products listed, including the latest revision described below, are eligible to be marked in accordance with the referenced Certificate.

Product Certification History

Project	Date	Description
2075585	October 28, 2008	Update of report 1480900 to cover an alternative approved temperature controller
1634862	Jan. 19, 2005	Update of report -1480900, addition of Tcodes T2 and T2A
1480900	Sept. 23, 2003	Original Certification. Model HEX 5-1 and HEX 5-2.

DQD 507 Rev. 2004-06-30 Page 1

IECEx Certificate of Conformity

INTERNATIONAL ELECTROTECHNICAL COMMISSION
IEC Certification System for Explosive Atmospheres

for rules and details of the IECEx Scheme visit www.iecex.com

Certificate No.:	**IECEx BVS 16.0025**	Page 1 of 5	Certificate history: Issue 0 (2016-05-02)
Status:	**Current**	Issue No: 1	
Date of Issue:	2020-03-23		
Applicant:	**M&C TechGroup Germany GmbH** Rehhecke 79 40885 Ratingen **Germany**		
Equipment:	**Heater type HEX5-*.08**		
Optional accessory:			
Type of Protection:	**Type of protection "n", Dust ignition protection by enclosure "t", Increased safety "e"**		
Marking:	Ex ec nC IIC T2 - T5 Gc Ex tc III C T75°C - 235°C Dc	or	Ex ec IIC T2 - T5 Gc Ex tc III C T75°C - 235°C Dc

Approved for issue on behalf of the IECEx Certification Body:	**Jörg Koch**
Position:	**Head of Certification Body**
Signature: (for printed version)	
Date:	

1. This certificate and schedule may only be reproduced in full.
2. This certificate is not transferable and remains the property of the issuing body.
3. The Status and authenticity of this certificate may be verified by visiting www.iecex.com or use of this QR Code.

Certificate issued by:

DEKRA Testing and Certification GmbH
Certification Body
Dinnendahlstrasse 9
44809 Bochum
Germany

DEKRA
On the safe side.

IECEx Certificate of Conformity

Certificate No.:	**IECEx BVS 16.0025**	Page 2 of 5
Date of issue:	2020-03-23	Issue No: 1

Manufacturer: **M&C TechGroup Germany GmbH**
Rehhecke 79
40885 Ratingen
Germany

Additional manufacturing locations:

This certificate is issued as verification that a sample(s), representative of production, was assessed and tested and found to comply with the IEC Standard list below and that the manufacturer's quality system, relating to the Ex products covered by this certificate, was assessed and found to comply with the IECEx Quality system requirements.This certificate is granted subject to the conditions as set out in IECEx Scheme Rules, IECEx 02 and Operational Documents as amended

STANDARDS :
The equipment and any acceptable variations to it specified in the schedule of this certificate and the identified documents, was found to comply with the following standards

IEC 60079-0:2011 Explosive atmospheres - Part 0: General requirements
Edition:6.0

IEC 60079-15:2010 Explosive atmospheres - Part 15: Equipment protection by type of protection "n"
Edition:4

IEC 60079-31:2013 Explosive atmospheres - Part 31: Equipment dust ignition protection by enclosure "t"
Edition:2

IEC 60079-7:2015 Explosive atmospheres – Part 7: Equipment protection by increased safety "e"
Edition:5.0

This Certificate **does not** indicate compliance with safety and performance requirements other than those expressly included in the Standards listed above.

TEST & ASSESSMENT REPORTS:
A sample(s) of the equipment listed has successfully met the examination and test requirements as recorded in:

Test Report:

DE/BVS/ExTR16.0028/00

Quality Assessment Report:

DE/BVS/QAR17.0009/00

IECEx Certificate of Conformity

Certificate No.:	**IECEx BVS 16.0025**	Page 3 of 5
Date of issue:	2020-03-23	Issue No: 1

EQUIPMENT:
Equipment and systems covered by this Certificate are as follows:

Description

The heater HEX5-*.08 serves for heating of metallic bodies.
It consists of a heating cartridge in type of protection Increased Safety "e" according to BVS 04 ATEX E 253, a temperature controller with limiter and a temperature sensor.
The two variants of the heater HEX5-*.08:
Type HEX 5-1: The heating cartridge and the temperature controller are mounted together in an enclosure in type of protection Increased Safety resp. Protection by Enclosure.
Type HEX 5-2: The heating cartridge and the temperature controller are mounted into two different enclosures in type of protection Increased Safety resp. Protection by Enclosure.
The relays are carried out in type of protection nC.

Subject and Type

See Annex

SPECIFIC CONDITIONS OF USE: NO

IECEx Certificate of Conformity

Certificate No.: **IECEx BVS 16.0025** Page 4 of 5

Date of issue: 2020-03-23 Issue No: 1

Equipment (continued):

Parameters

Electrical data

Supply

Supply voltage		240 V
Frequency		50/60 Hz
Power		800 VA

or

Supply voltage		120 V
Frequency		50/60 Hz
Power		830 VA

Alarm contact

Voltage		230 V
Current	AC	3 A
	DC	0.25 A

Thermal data

Ambient temperature controller	0 °C up to 50 °C
Ambient temperature terminal box	- 20 °C up to 70 °C

Temperature class / max. surface temperature T

Controller			
Temperature class	Limiter [°C]	Service temperature [°C]	Max. surface temperature T [°C]
T2	235	230	235
T2	220	215	220
T3	190	185	190
T3	180	175	180
T3	165	160	165
T3	155	150	155
T3	140	135	140
T4	125	120	125
T4	100	95	100
T5	90	85	90
T5	75	70	75

IECEx Certificate of Conformity

Certificate No.:	**IECEx BVS 16.0025**	Page 5 of 5
Date of issue:	2020-03-23	Issue No: 1

DETAILS OF CERTIFICATE CHANGES (for issues 1 and above)
This new issue of the Certificate is to cover a change in the ExCB for conducting surveillance assessment and issuing of QARs.